Computer Systems
Lecture 24

Overview

- Half adder
- Full adder
- Sequential logic circuits
- Flip-flops
- Other types of flip-flops

Doing arithmetic via logic

- Binary addition. For the addition of single-bit binary numbers: (Half-)adder.

X	Y	ADD C	ADD S
0	0	0	0
0	1	0	1
1	0	0	1
1	1	1	0

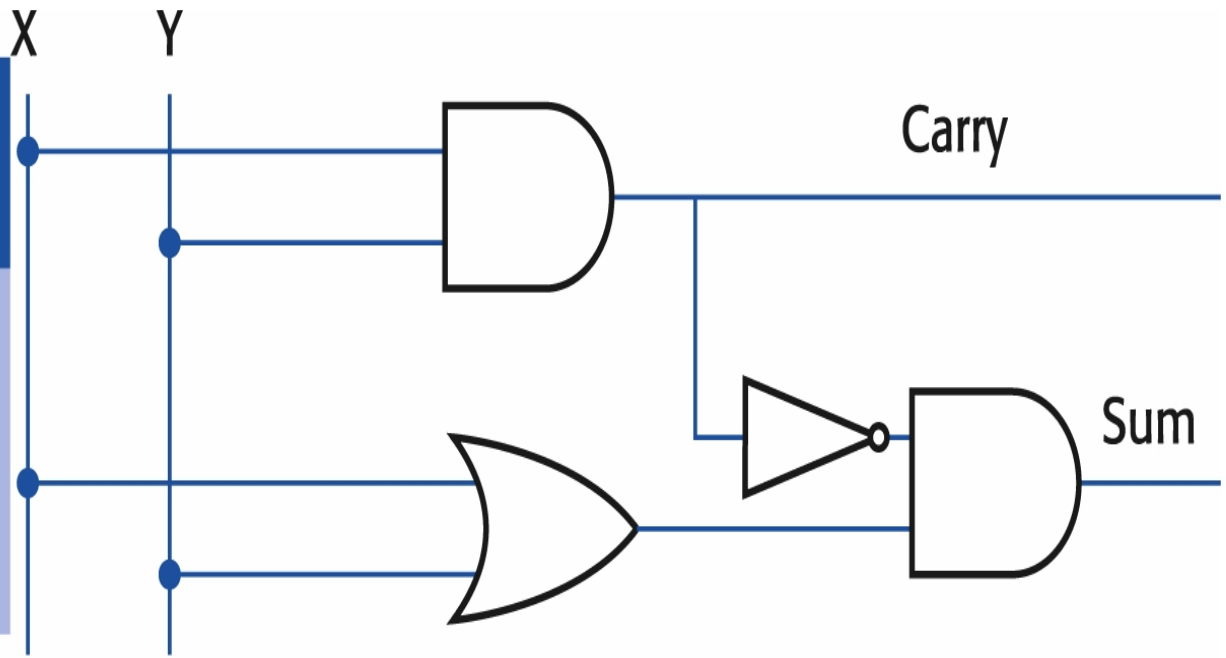

Fig. 5.2 Adder v.1.

© Pearson Education 2001

Other possible designs for half adder

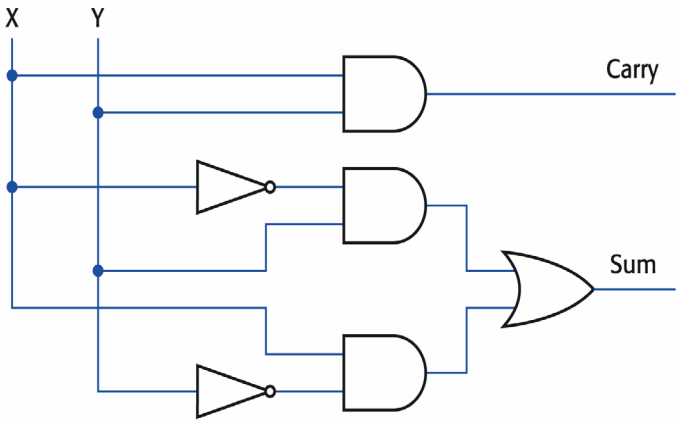

Fig. 5.3 Adder v.2.

© Pearson Education 2001

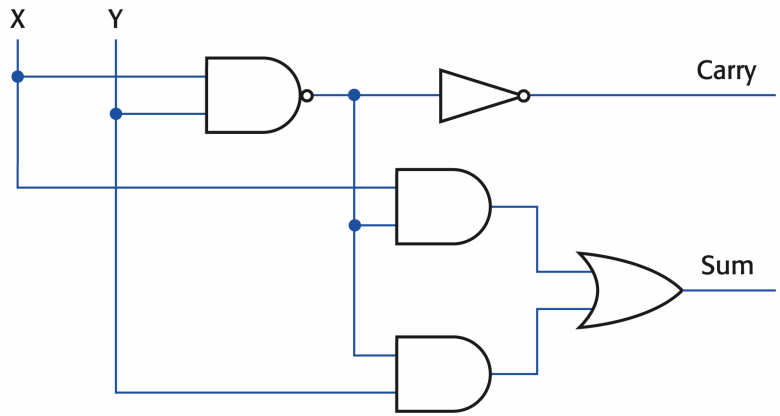

Fig. 5.4 Adder v.3.

© Pearson Education 2001

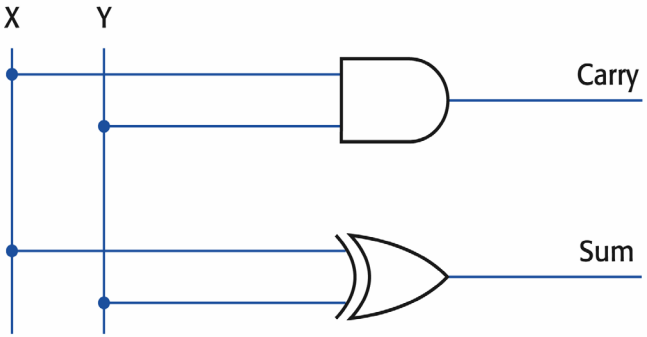

Fig. 5.5 Adder v.4, using an XOR gate for the Sum.

© Pearson Education 2001

Full adder

- For the addition of multi-bit binary numbers one needs to deal with carry-in from previous stage, that means the adder should have three inputs.

X	Y	Z	C	S
0	0	0	0	0
0	0	1	0	1
0	1	0	0	1
0	1	1	1	0
1	0	0	0	1
1	0	1	1	0
1	1	0	1	0
1	1	1	1	1

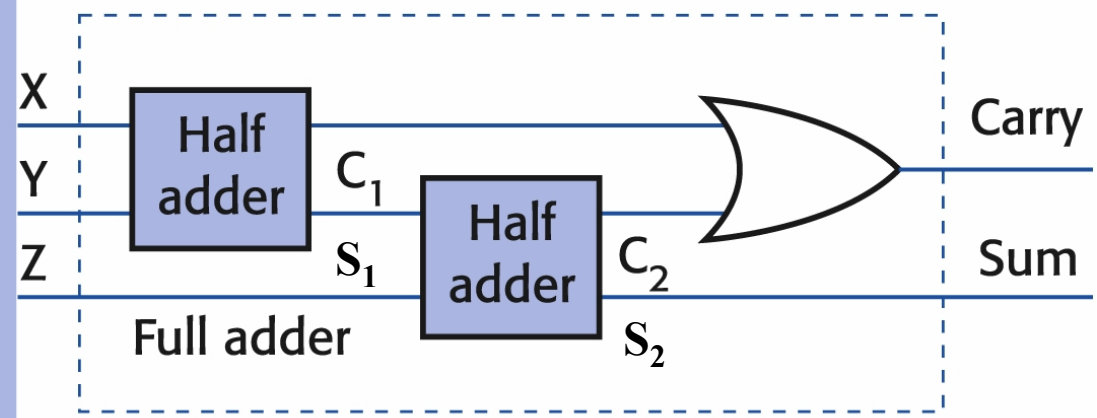

Fig. 5.6 Full adder.

© Pearson Education 2001

Full adder (cont.)

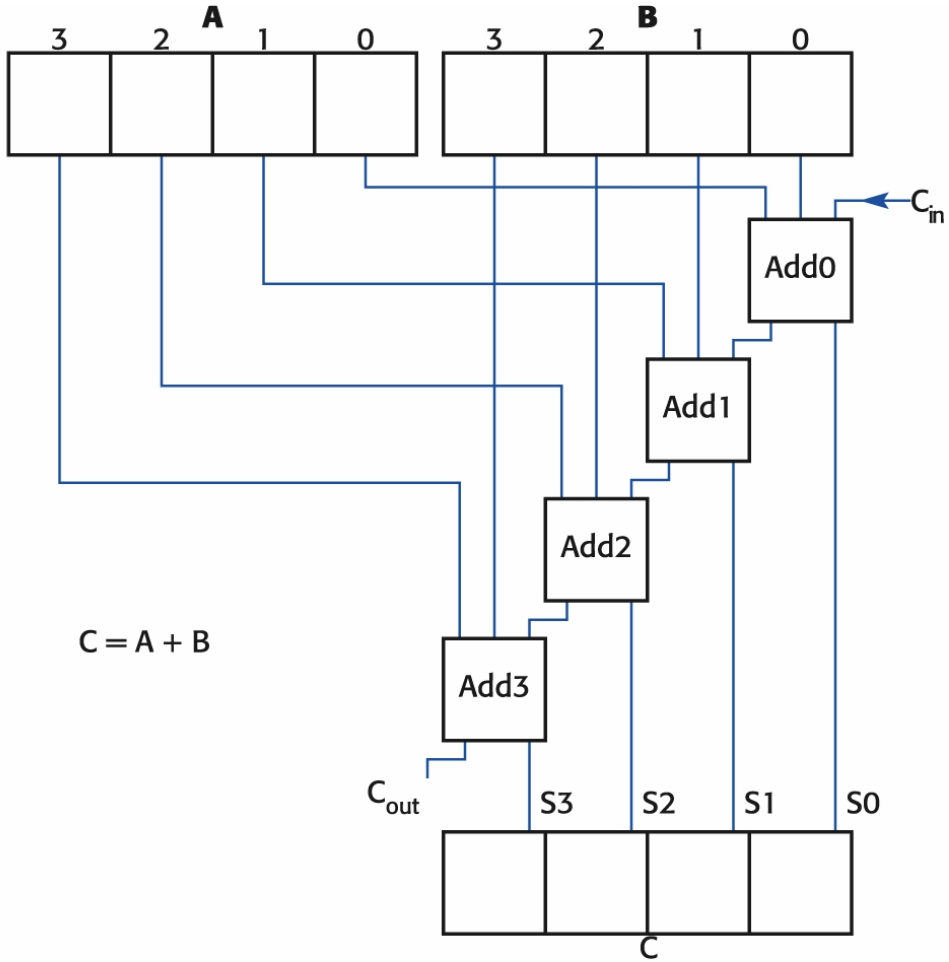

Fig. 5.7 Paralleladdition for 4 bit numbers.

©PearsonEducation2001

Ex. Extend 4-bit full adder into 8-bit full adder

Sequential logic circuits

- **Combinational** (combinatorial) logic circuits.
  - In all Boolean circuits that we have seen so far, the output at any moment depends only on the input at the same moment.
  - **No memory** is there.
- **Sequential** logic circuits.
  - The output depends also on the **state** of the circuit. The state of the circuit is somehow stored within the circuit.
  - There is a **memory** inside.

Flip-flops, or latches

- The basic memory element of the sequential circuits is called a **flip-flop**, or **latch**.
- The simplest flip-flop is made up of two NAND gates. It is called set-reset (SR) flip-flop.

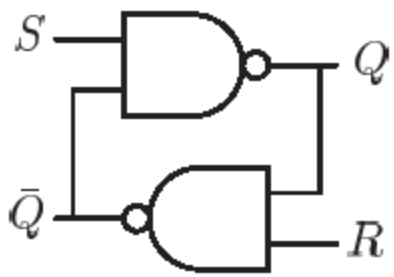

- Inputs are S and R while outputs are Q and $\bar{Q}$.

SR flip-flop

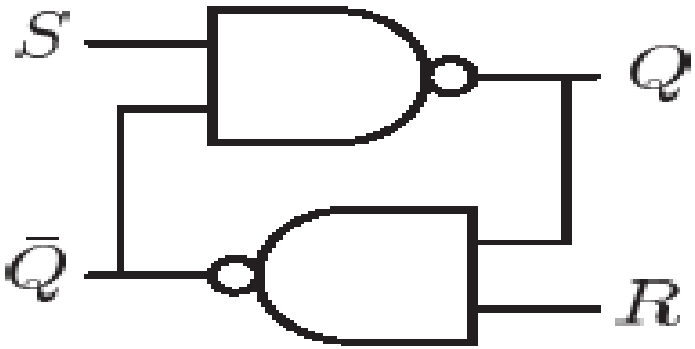

- Suppose that S and R are both initially set to 1. Can we determine two outputs Q and $\bar{Q}$? **No.** Two variants are possible:

$Q = 1$ and $\bar{Q} = 0$, or

$Q = 0$ and $\bar{Q} = 1$

- Everything is consistent with any of these variants.

SR flip-flop (cont.)

- If we fix both inputs to be 1, then the circuit may have one of the two possible **states**. The circuit is **stable** as long as R and S remain at 1.

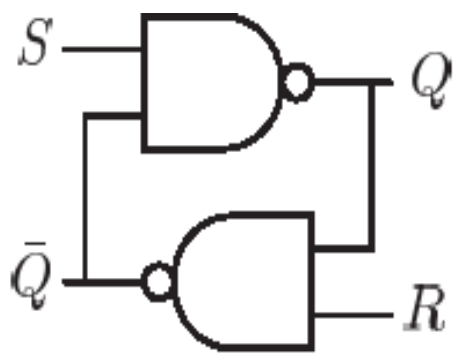

SR flip-flop (cont.)

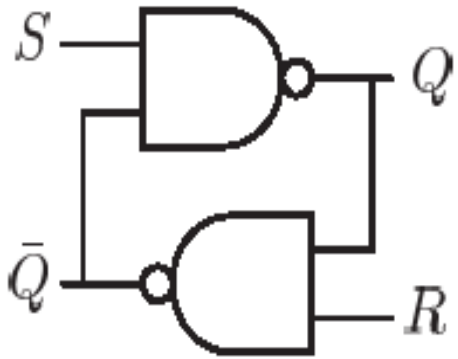

- Let's assume that flip-flop is in a stable state with Q=1.
- Suppose, R momentarily becomes 0. This forces changing the value of Q to 0. The circuit will stay in this state even after input R returns to 1. The flip-flop **switched** the states.
- If then input S momentarily becomes 0 the system will switch the state back.

SR flip-flop (cont.)

- Thus, SR flip-flop **remembers** which input was set (momentarily) to 0 last.

- One constraint: the logic surrounding this flip-flop must avoid situations where **both** R and S are 0 at the same time.

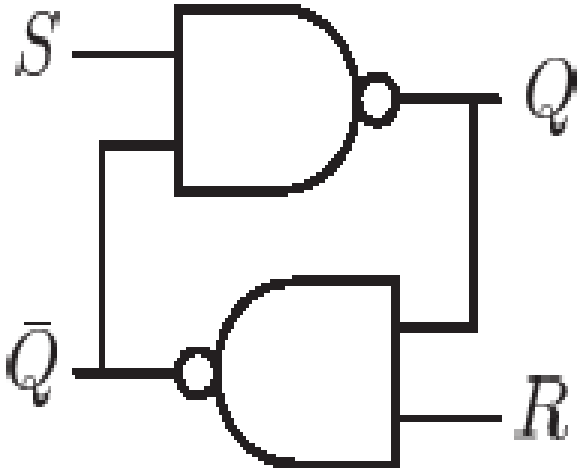

State table of SR flip-flop

R	S	Q
0	0	?
0	1	0
1	0	1
1	1	Q_{prev}

SR representation

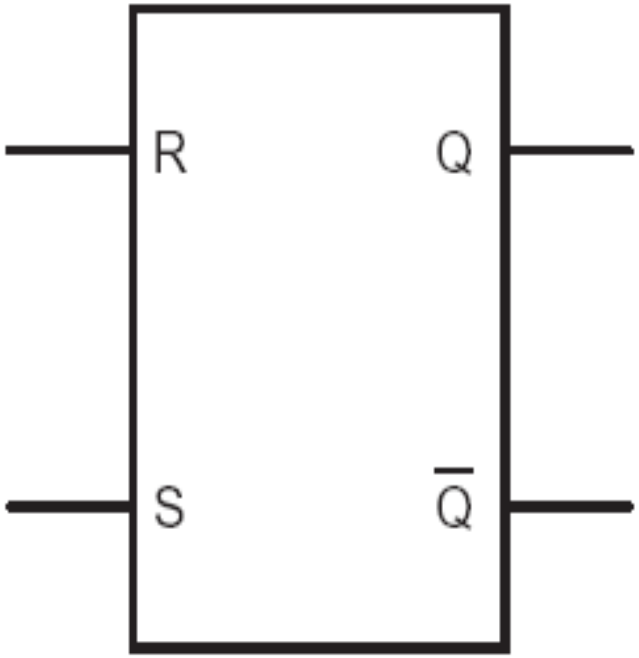

FlipFlop(SR)

Other types of flip-flops

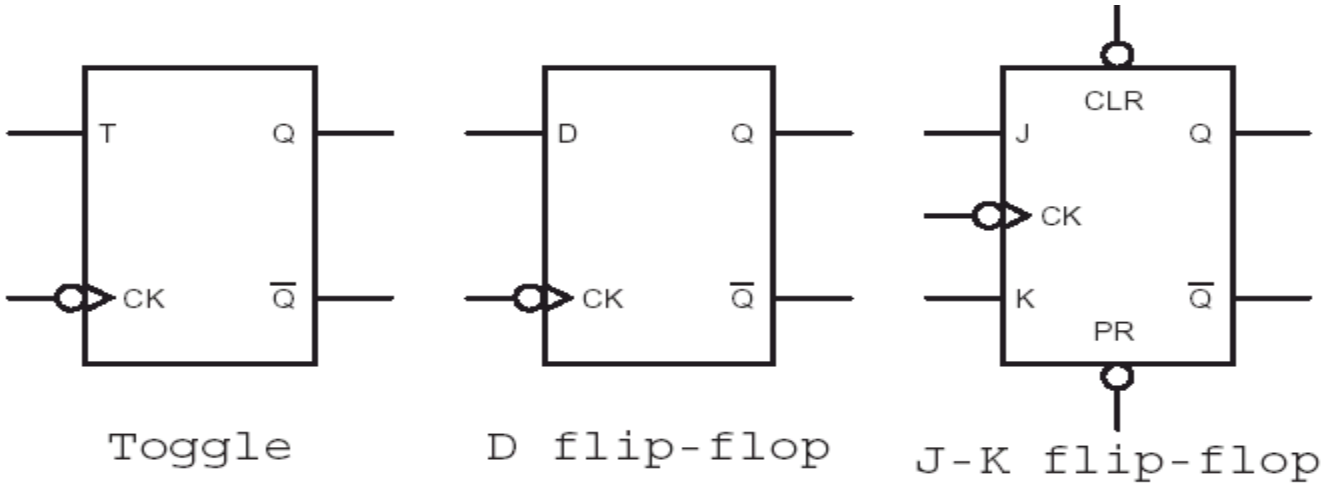

- All these flip-flops has an input marked for **clock**. The new output occurs when the clock is pulsed, i.e. momentarily changed from 1 to 0.
- CLR (clear) and PR (preset) inputs are used to initialise the flip-flop to known value (0 and 1, respectively).

Other types of flip-flops (cont.)

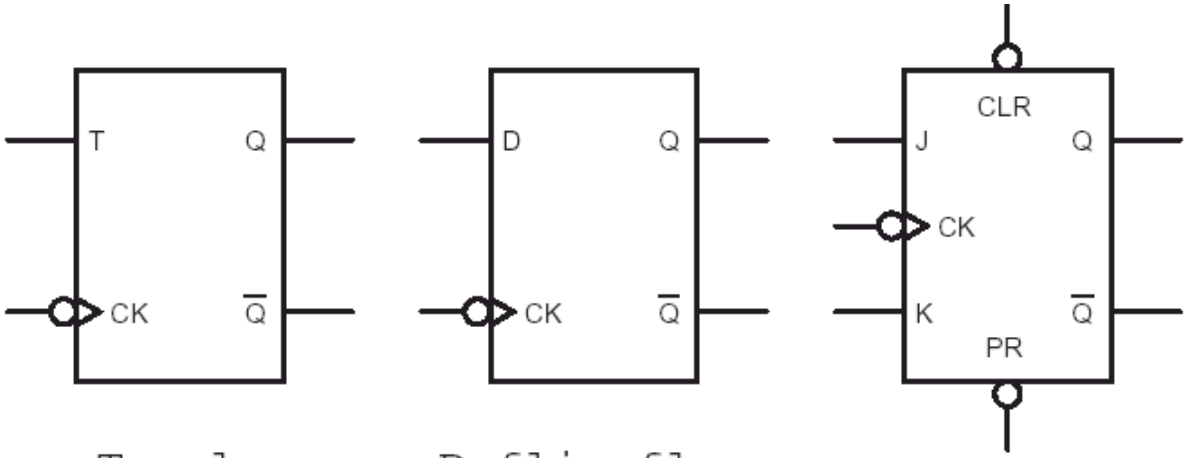

Toggle D flip-flop J-K flip-flop

T	Q
0	Q_{prev}
1	$\bar{Q}_{prev}$

D	Q
0	0
1	1

J K	Q
0 0	Q_{prev}
0 1	0
1 0	1
1 1	$\bar{Q}_{prev}$

Use of D flip-flops - Copying data

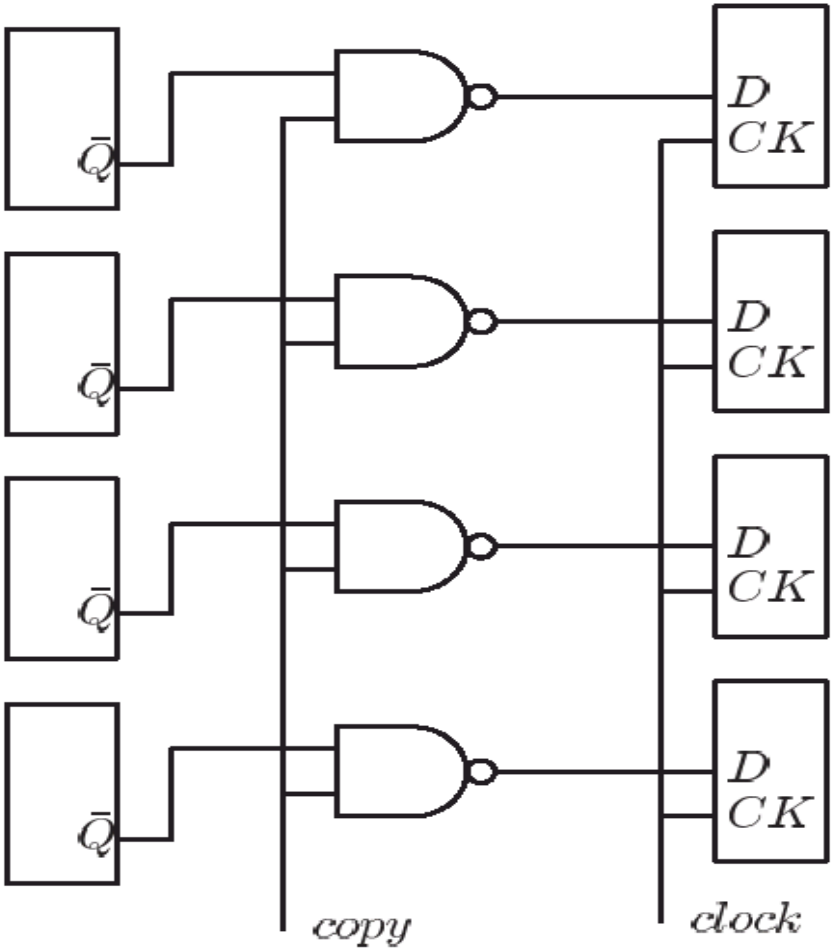

Circuit to copy data from one register to another.

- Q. What type of flip-flop has an illegal state?

- Q. What type of flip-flop allows us to copy data?

- Q. What type of circuit has ‘memory’?

Readings

- [Wil06] Sections 5.1, 5.2, 6.1.